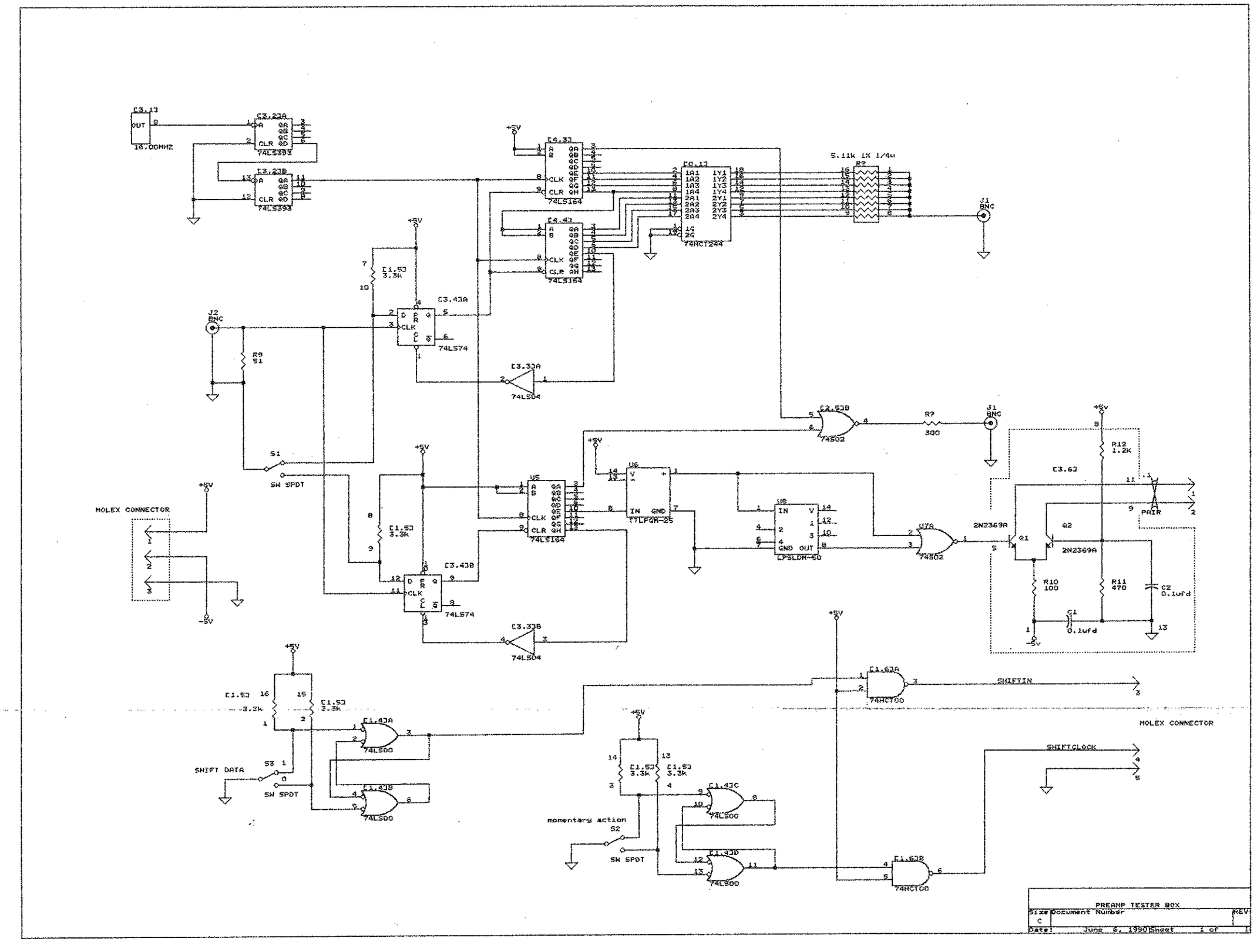

16.00MHZ
74LS393
74LS164
74HCT244
5.11k 1% 1/4w
74LS74
74LS04
74S02
TTLPGM-25
LPSLDM-50
2N2369A
PAIR
MOLEX CONNECTOR
SW SPDT
SHIFT DATA
momentary action
SHIFTIN
SHIFTCLOCK
74LS00
74HCT00
PREAMP TESTER BOX
Size C
Document Number
REV
Date: June 6, 1990
Sheet 1 of 1