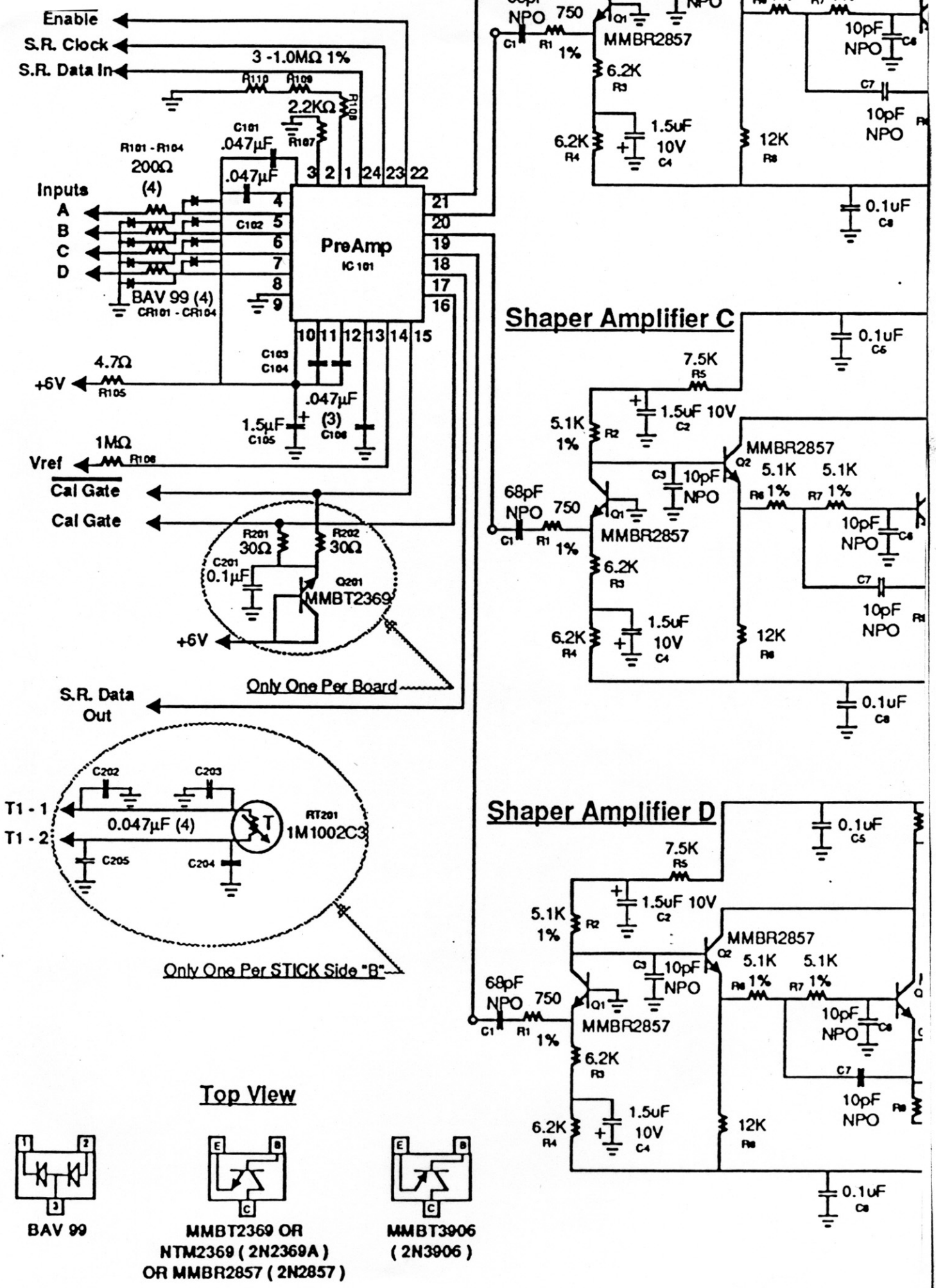
Enable
S.R. Clock
S.R. Data In
3 -1.0MΩ 1%
R110
R109
R108
2.2KΩ
R107
C101
.047µF
R101 - R104
200Ω
(4)
.047µF
Inputs
A
B
C
D
C102
BAV 99 (4)
CR101 - CR104
PreAmp
IC 101
C103
C104
4.7Ω
+6V
R105
.047µF
(3)
C106
1.5µF
C105
1MΩ
Vref
R106
Cal Gate
Cal Gate
R201
30Ω
R202
30Ω
C201
0.1µF
Q201
MMBT2369
+6V
Only One Per Board
S.R. Data Out
C202
C203
T1 - 1
T1 - 2
0.047µF (4)
RT201
1M1002C3
C205
C204
Only One Per STICK Side "B"
Shaper Amplifier C
Shaper Amplifier D
68pF
NPO
750
C1
R1
1%
Q1
MMBR2857
6.2K
R3
6.2K
R4
1.5uF
10V
C4
12K
R8
10pF
NPO
C6
C7
10pF
NPO
0.1uF
C8
7.5K
R5
1.5uF 10V
C2
5.1K
1%
R2
MMBR2857
Q2
C3
10pF
NPO
5.1K
R6
1%
5.1K
R7
1%
0.1uF
C5
Top View
BAV 99
MMBT2369 OR
NTM2369 (2N2369A)
OR MMBR2857 (2N2857)
MMBT3906
(2N3906)