Model 3094

CAMAC 16-Bit Output Register with Isolated

Relay Contacts and Latchback Input

INSTRUCTION MANUAL

August 1975

KineticSystems

TABLE OF CONTENTS

***** IMPORTANT NOTICE *****

ACCESS TO STRAP OPTIONS

The module strap options use AMP pressure-contact terminals; they may be changed without a soldering iron.

The LB and QR straps are on the component side of the left-hand board (as seen from the front). These straps are in open view.

The 16 L/M straps are on the solder side of the right-hand board. To CHANGE THESE STRAPS REMOVE THE GROUND PLANE (Remove the 3 bottom screws and loosen the 3 top screws).

MODULE DISASSEMBLY

If it becomes necessary to disassemble the module, remove the four screws from the rear plate; then remove this plate. Remove the two screws holding the left-hand (relay) board to the front panel and separate the boards.

The front panel LED's are wired to the right-hand board and the front panel must remain affixed to that board.

CAMAC 16-bit Output Register with Isolated Relay
Contacts and Latchback Input
Model 3094

GENERAL DESCRIPTION

The Model 3094 is a double-width module that combines a 16-bit output register driving relays with isolated contacts and a 16-bit input gate. The relays may be energized and de-energized singly or in combination by a versatile set of CAMAC commands, making the module particularly useful in control applications. The state of the inputs as well as the state of the relay register can be read by CAMAC command. By strap option, the 3094 operates as a latchback module or as a module with both a 16-bit output register and a separate 16-bit input gate.

LATCHBACK OPERATION

In addition to control of the relays by CAMAC command, local control can be provided by use of the latchback inputs. This simplified drawing shows one of the relays with local control:

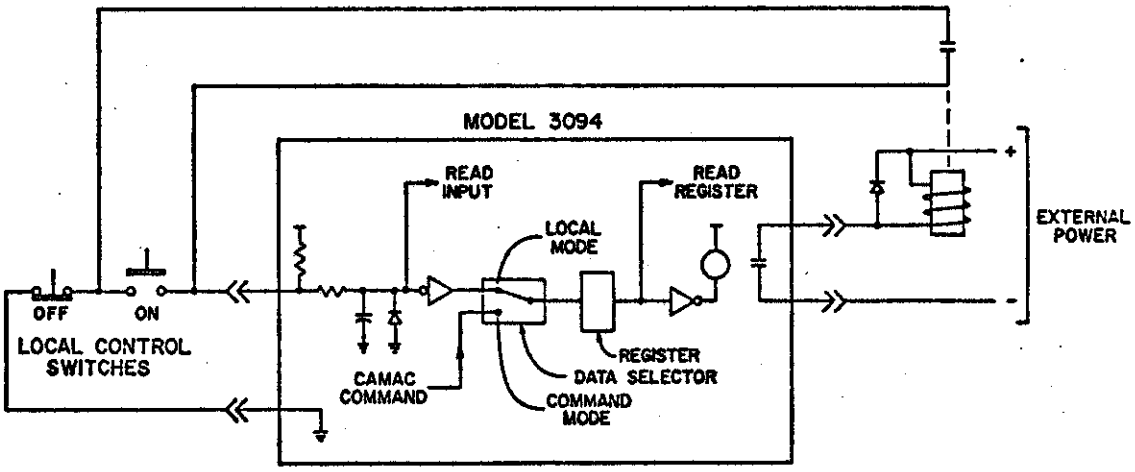

When the relay register is written or cleared, the module is transferred into COMMAND mode. While in that mode, the state of the relay register cannot be changed by local controls. A group comparator is used to compare the states of the relay register and the external latchback inputs bit-by-bit. As soon as the latchback inputs match the relay register bits (indicating that the external devices have reached the selected states), the module transfers from COMMAND to LOCAL mode. The relay states can now be changed by local control. If a compare is not obtained (possibly because of a defective external device), a F(12)·A(0) command will force the module into LOCAL mode. The module will remain in LOCAL mode until another write or clear command is received.

OUTPUTS

The 16 relay outputs appear on the LEFT 36 pin rear I/O connector (viewed from the front). These outputs are isolated from each other and from ground. Sealed dry reed relays are used for long life. They are rated at 100 volts and ½ ampere (10 volt-amperes MAXIMUM load). The relay life expectancy is 10×10^6 operations at full rated load. Some arc suppression is provided on the module; however, inductive loads must be externally suppressed to keep the contact voltage below 100 volts.

INPUTS

The 16 inputs appear on the RIGHT 36 pin rear I/O connector. These inputs include 680 ohm pullup resistors to +5 volts, providing 7mA 'wetting current' for the external contacts. These inputs are low true with a switching threshold between 2 and 3 volts. Each input also includes a capacitor for improved noise immunity, a diode to protect against reverse voltages and a DTL gate with hysterisis.

USER OPTIONS

The module includes strapping options to increase its versatility. The factory-strapped option is underlined in each case:

1. The module provides <u>latchback operation</u> as described earlier. By removing the LB strap, it always remains in the COMMAND mode, functioning as a module with separate 16-bit inputs and outputs.

2. The command F(0)·A(1) <u>will not return Q</u> if the module is in <u>COMMAND mode</u>. By removing the QR strap, this command will always return Q.

3. There are 16 straps labeled L on the right-hand board; these straps <u>allow local control</u> in LOCAL mode. By moving any of these straps to M (Momentary), the associated relay(s) will release when LOCAL mode is reached.

CONNECTORS

All I/O connections are made via two 36 pin PC connectors at the rear of the module. Each of these connectors mates with a 36 pin (Viking Type 3VH18/1JV8 or equivalent) edge connector.

MODULE ADDRESS

This module uses two slots in the CAMAC crate. The module address (N) is the RIGHT slot as viewed from the front.

POWER

This module uses +24 volts and +6 volts. The maximum current drain is 95mA at +24 volts and 950mA at +6 volts.

FRONT PANEL

A jack-screw is provided which functions both in insertion and in extraction of the module. The status indications on the front panel include an N light which flashes whenever the module is addressed and a LOCAL light that indicates that the module is in LOCAL mode.

COMMAND	ACTION**
F(0)·A(0)	Gates the state of the 16 latchback inputs onto the Dataway.
F(0)·A(1)	Gates the state of the 16-bit relay register onto the Dataway. Returns Q = 1 if in LOCAL mode and Q = 0 if in COMMAND mode.
F(1)·A(15)	Gates the module identifying number ($3094_{10} = 6026_8$) onto the Dataway.
F(9)·A(0)	Clears the 16-bit relay register.
F(12)·A(0)	Forces the module into the LOCAL mode.
F(16)·A(0)	Writes the 16-bit relay register.
F(18)·A(0)*	Selectively sets the 16-bit relay register.
F(21)·A(0)*	Selectively clears the 16-bit relay register.
(Z + C)S2	Clears the 16-bit relay register.
Power Up	Delays the application of the +24V relay supply for 0.5 seconds after the +6V is applied and clears the 16-bit relay register.

*Selective set and clear definitions:

Let A = bit in register before dataway cycle

B = data bit transferred during dataway cycle

C = result after dataway cycle

Selective set $C = A + B$

Selective clear $C = A \cdot \overline{B}$

**The module returns X = 1 for all valid commands and Q = 1 for all valid commands except for F(0)·A(1) where the response depends upon the results of the test.

MODULE 3094 'A' Board (left as seen from front)

POWER REQUIREMENTS

+6	ma	-6	ma
+12	ma	-12	ma
+24	ma	-24	ma

I/O Connector

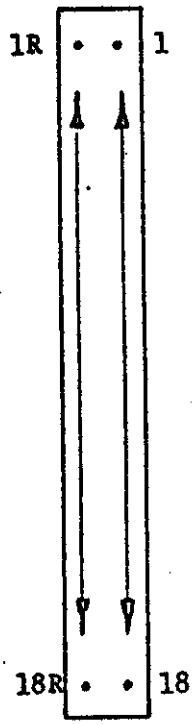

Viewed from the rear

1R	GND	1	GND
2R	Contact Ø	2	Contact ØA
3R	" 1	3	" 1A
4R	" 2	4	" 2A
5R	" 3	5	" 3A
6R	" 4	6	" 4A
7R	" 5	7	" 5A
8R	" 6	8	" 6A
9R	" 7	9	" 7A
10R	" 8	10	" 8A
11R	" 9	11	" 9A
12R	" 10	12	" 10A
13R	" 11	13	" 11A
14R	" 12	14	" 12A
15R	" 13	15	" 13A
16R	" 14	16	" 14A
17R	" 15	17	" 15A
18R		18	

KineticSystems Corporation Maryknoll Drive Lockport, IL 60441 815-838-0005

RTC 12-14-73

MODULE 3094 'B' Board (right as seen from front)

POWER REQUIREMENTS (A & B Board combined)

+6	950	ma	-6		ma
+12		ma	-12		ma
+24	95	ma	-24		ma

I/O Connector

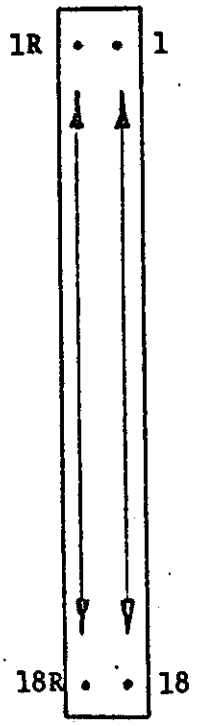

Viewed from the rear

1R	GND	1	GND
2R	Input Ø	2	"
3R	" 1	3	"
4R	" 2	4	"
5R	" 3	5	"
6R	" 4	6	"
7R	" 5	7	"
8R	" 6	8	"
9R	" 7	9	"
10R	" 8	10	"
11R	" 9	11	"
12R	" 10	12	"
13R	" 11	13	"
14R	" 12	14	"
15R	" 13	15	"
16R	" 14	16	"
17R	" 15	17	"
18R		18	

WARRANTY

All KineticSystems Corporation equipment is warranted against defects in workmanship and material under normal use and service for a period of one year from the date of shipment. KSC will repair or replace at KSC's option any equipment found to be defective in workmanship or material within one year of shipment. Repair charges will be applicable from one year after delivery with repair charges varying, depending on the complexity of the equipment.

Equipment purchased by KineticSystems Corporation for resale will carry the original equipment manufacturers' warranty.

The equipment warranty outside the continental U.S.A. or Switzerland is limited to repair of the equipment and excludes shipping, custom's clearance, or any other charges.

The equipment must be returned prepaid to KSC. Transportation charges for shipping the equipment to KSC shall be paid by the customer, while transportation charges for the return of the repaired equipment shall be paid by KSC except as indicated in the previous paragraph and will be made on a UPS basis where available, or parcel post insured. Premium methods of shipment are available at customer's expense and will be used only when requested. If KSC selects the carrier, KSC will not thereby assume any liability in connection with the shipment nor shall the carrier be in any way construed to be the agent of KSC.

No equipment will be accepted for credit or exchange without the prior approval of KSC. Contact the Repair Service Center in your area for a return authorization number.

All Customers (except European)
please ship units to:

KineticSystems Corporation
Repair Service
Maryknoll Drive
Lockport, Illinois 60441

Telephone No. 815 838 0005
TWX 910 638 2831

In Europe ship all units to:

Kinetic Systems International S.A.
Repair Service
6 Chemin de Tavernay
1218 GENEVE, SUISSE.

Telephone No. (022) 98 44 45
Telex 289 622